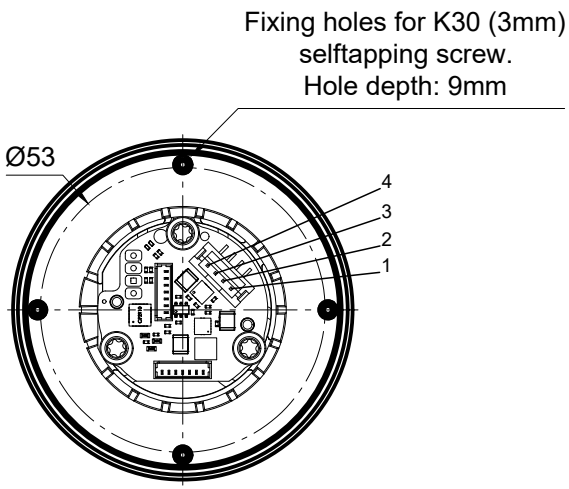


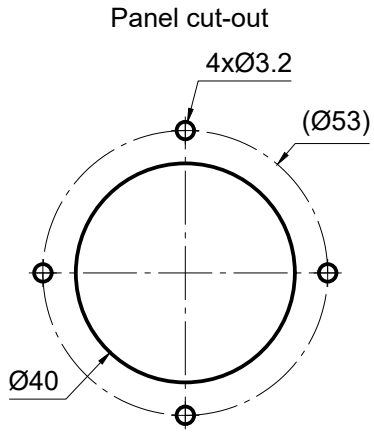


| Description | |
|---|---|
| Jog-Dial type 225-033 | |
| Number of axes | 3-axes, x-, y-, z-axis |
| Operation by | knob with z-axis (fully rotatable) |
| Pushbutton | entire knob pushable (Travel: 0.5mm) |
| Cross guidance | none |
| Retaining spring | Strong, P/N: 200457 |
| Detents | z-axis: 20 detents (18°) |
| Connector | JST-PH<br>4-pin |
| **Electrical characteristics** | |
| Operating voltage | 8-36 V DC |
| max. voltage range | 5-50 V DC |
| Sensor | Hall effect technology |
| **Connector pinout** | |
| 1 | VCC |
| 2 | CAN_L |
| 3 | CAN_H |
| 4 | GND |
| **Parameters** | |
| Data communication | CANopen - similar |
| CAN ID | 84 |
| Baudrate | 500 kbits/s |

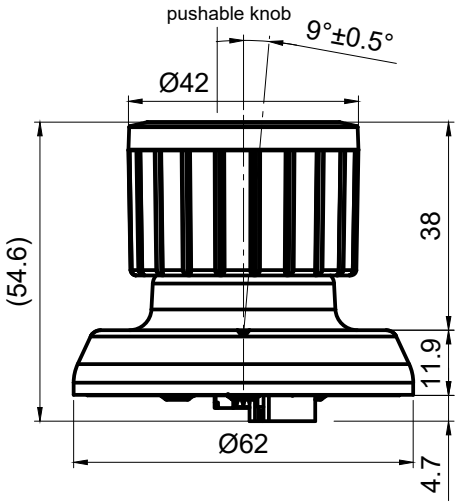


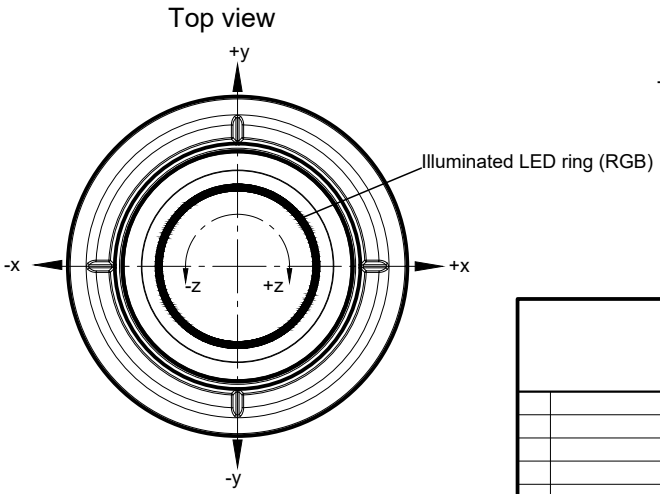


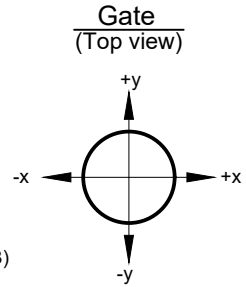


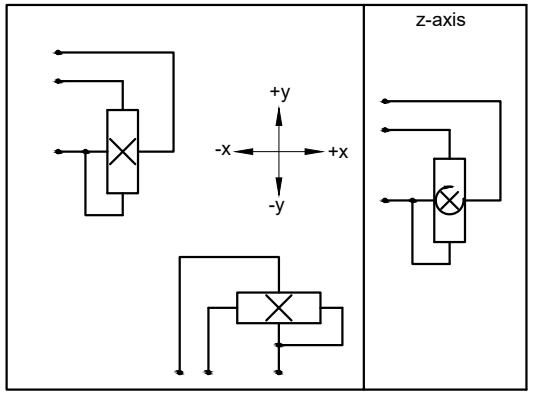


Maßstab 1:1 | Position - | Menge -

All dimensions in mm

| | Datum | Name |
|---|---|---|
| Bearb. | 01.04.25 | jub |
| Gepr. | | |

joysticks + sensors
Erlenstrasse 32
CH-2555 Brügg
Switzerland
+41 32 652 33 30
info@gtjoysticks.ch
www.gtjoysticks.ch
Joysticks AG

# RCC

SK 225

225-033

Blatt -

Bl

| Idx | Änderungen | Datum | B'arb. | Gepr. |
|---|---|---|---|---|

S:\Entwicklung\01_CAD-Daten\02_DWG\Dwg_SK225\Typenzeichnungen\225-033.dwg