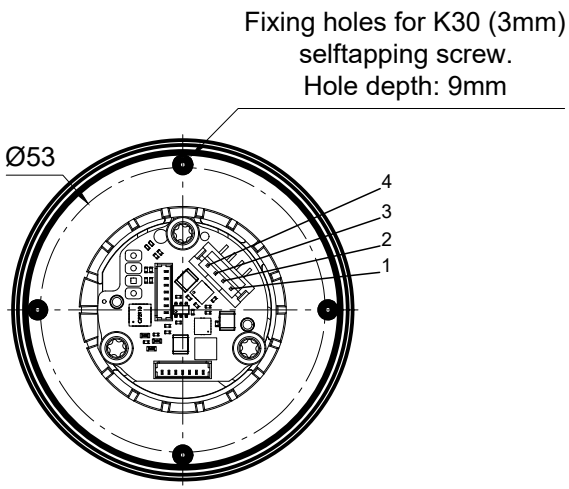

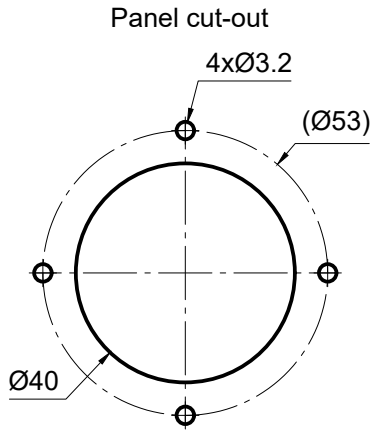

Description	
Jog-Dial type 225-032	
Number of axes	3-axes, x-, y-, z-axis
Operation by	knob with z-axis (fully rotatable)
Pushbutton	entire knob pushable (Travel: 0.5mm)
Cross guidance	none
Retaining spring	Strong, P/N: 200457
Detents	z-axis: 20 detents (18°)
Connector	JST-PH 4-pin
Electrical characteristics	
Operating voltage	8-36 V DC
max. voltage range	5-50 V DC
Sensor	Hall effect technology
Connector pinout	
1	VCC
2	CAN_L
3	CAN_H
4	GND
Parameters	
Data communication	J1939 - similar
CAN ID	1
Baudrate	250 kbits/s

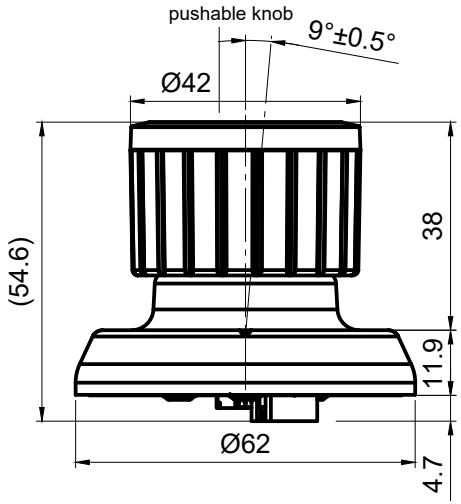

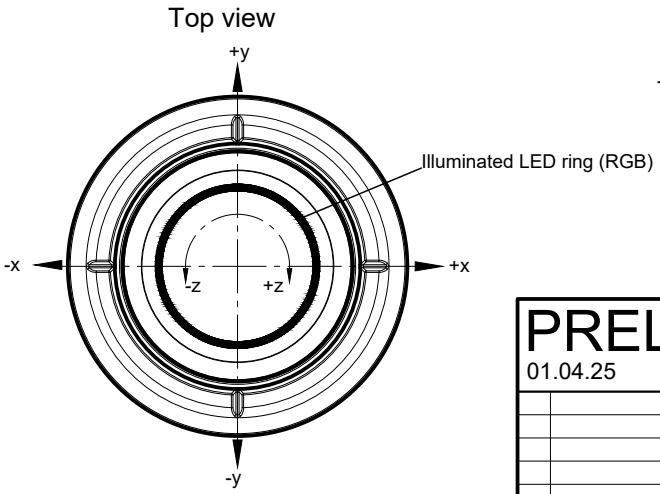

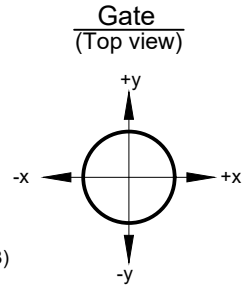

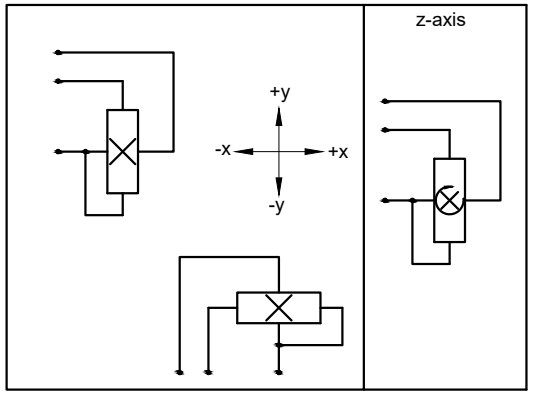

PRELIMINARY

01.04.25

Maßstab 1:1 | Position - | Menge -

All dimensions in mm

	Datum	Name
Bearb.	01.04.25	jub
Gepr.		

RCC

SK 225

225-032

Blatt -

Bl

joysticks + sensors
Erlenstrasse 32
CH-2555 Brügg
Switzerland
+41 32 652 33 30
info@gtjoysticks.ch
www.gtjoysticks.ch
Joysticks AG

Idx	Änderungen	Datum	B'arb.	Gepr.

S:\Entwicklung\01_CAD-Daten\02_DWG\Dwg_SK225\Typenzeichnungen\225-032.dwg