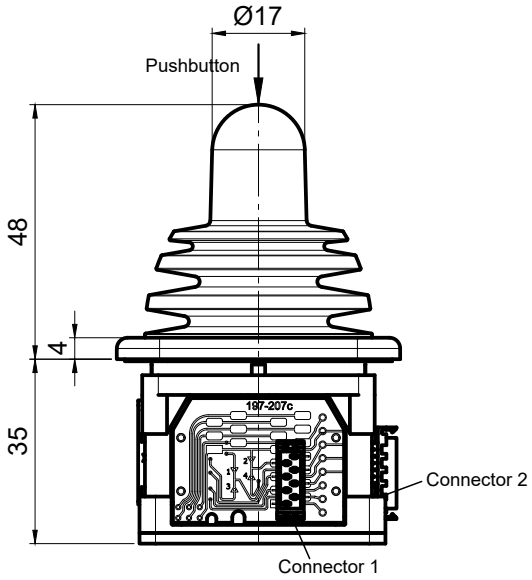

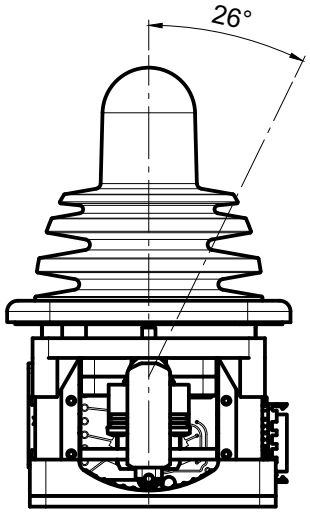

Gate
(Top view)

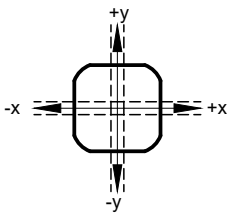

Output diagram
(x-, y-axis)

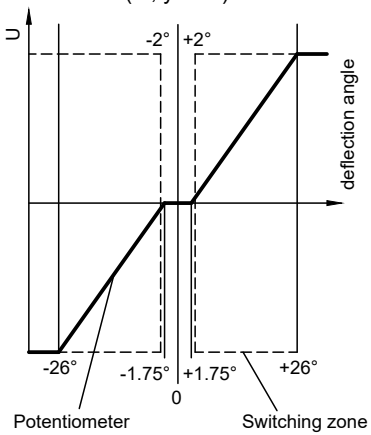

Description	
Joystick Type SK 197-0126	
Number of axes	2-axes, x-, y-axis
Operation by	Rubber bellow with pushbutton
Connector	Micro-Match, Female-on-Board Connector 1x 8-poles: P/N: 338069-8 1x 10-poles: P/N: 0-338069-1
Cross guidance	soft
Center tab	±1.75°
Retaining spring	Middle, P/N: 60-112.03
Switch function	1-1-1 per axis
Switchpoint α	±2°
Mechanical detents	5-1-5 per axis

Electrical characteristics	
Resistance value	5 kOhm ± 20%
Power dissipation	0.2 Watt at 40°C per axis
Contact rating	Zero potential difference between segments 5 V DC, 5mA
Operating voltage	30V DC max.
Pushbutton capacity	Max. 35V, 100mA

Axes		Potentiometer		Switch function	
	Direction	Colour/ number	Center tab	Joystick in mid-postition	
x-axis	↑ +x	13	18	15	open
	Wiper	12		16	17
	↓ -x	11		14	open
y-axis	↑ +y	23	28	25	open
	Wiper	22		26	27
	↓ -y	21		24	open

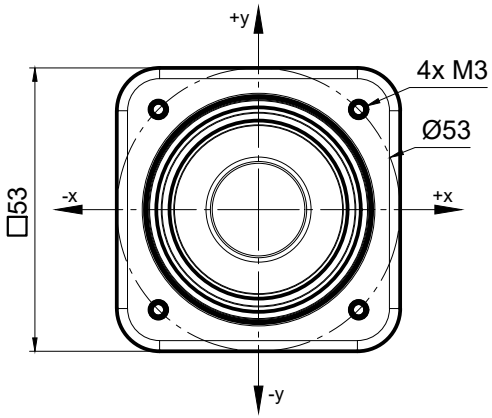

Pin assignment

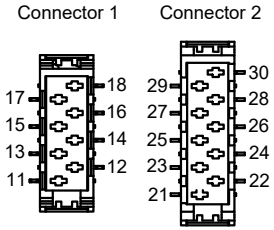

Panel mounting holes

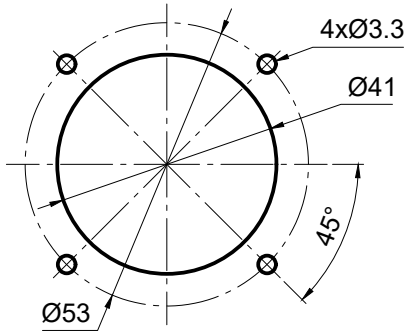

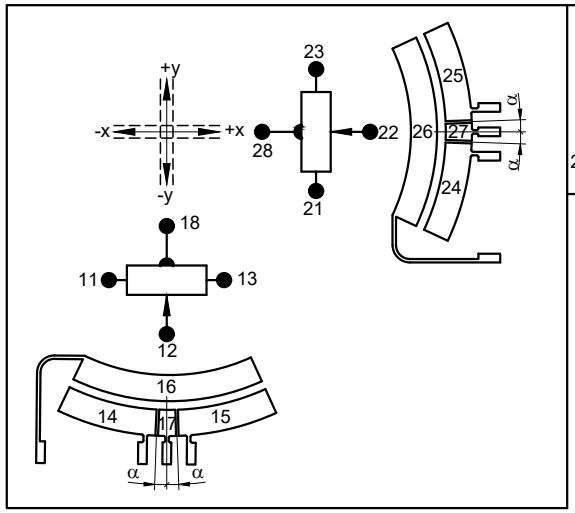

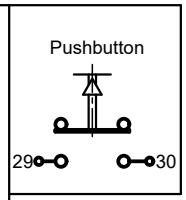

						Maßstab 1:1	Position - Menge -
						All dimensions in mm	
					Datum	Name	
				Bearb.	22.10.22	Kiener M.	Joystick
				Gepr.	05.03.24	VO	
a	AEN-25-007	17.07.26	DM				197-0126a
Idx	Änderungen	Datum	B'arb.	Gepr.			Blatt - Bl

joysticks + sensors
Erlenstrasse 32
CH-2555 Brügg
Switzerland
+41 32 652 33 30
info@gtjoysticks.ch
www.gtjoysticks.ch
Joysticks AG

S:\Entwicklung\01_CAD-Daten\02_DWG\Dwg_SK197\Typenzeichnungen\197-0126.dwg